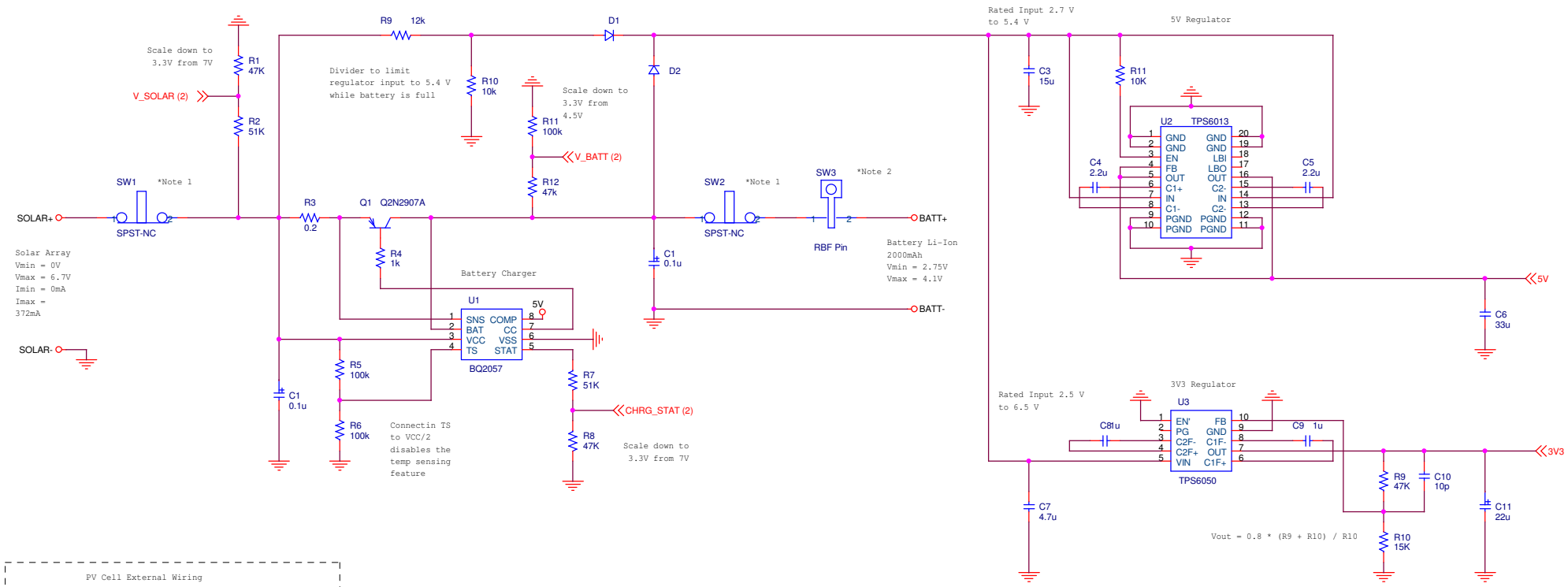

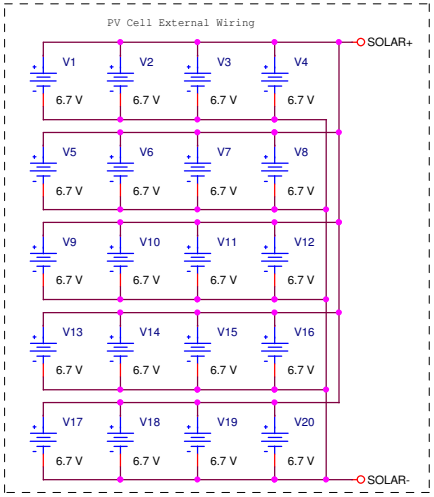

*Note 1

The deployment switches shall completely turn off satellite power once actuated. They shall be depressed once inserted into the P-POD.

*Note 2

RBF Pin shall be removed from the CubeSat after integration into the P-POD. It shall cut power to the satellite once inserted.

Title	Satellite (Power)	
Size Custom	Document Number 3	Rev 2
Date: Monday, December 06, 2010	Sheet 1 of 1	